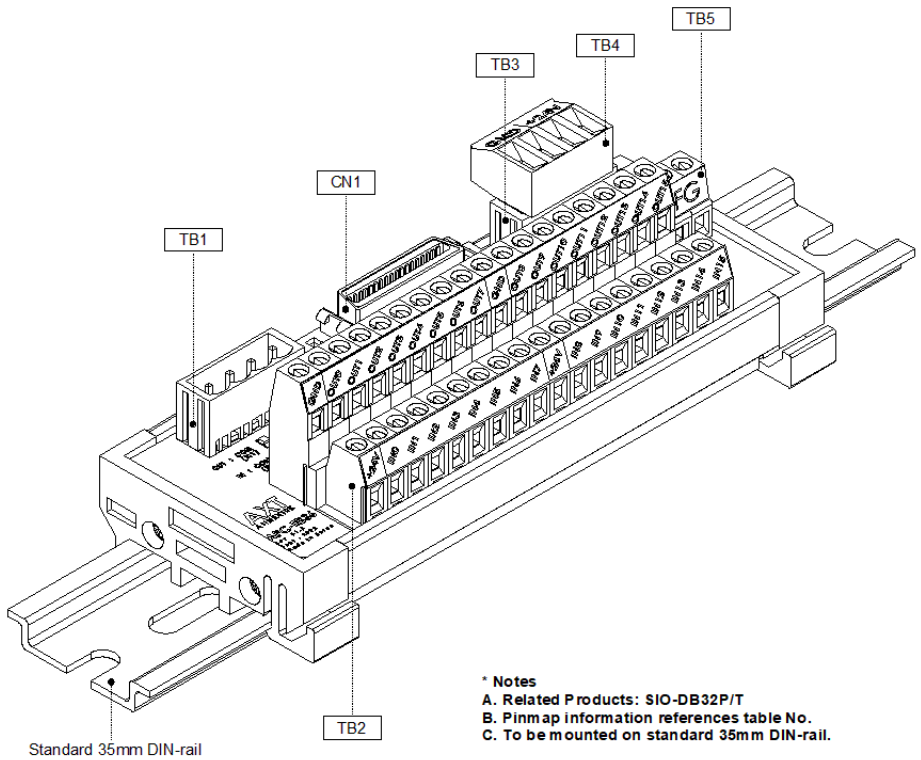

* Notes
A. Related Products: SIO-DB32P/T
B. Pinmap information references table No.
C. To be mounted on standard 35mm DIN-rail.

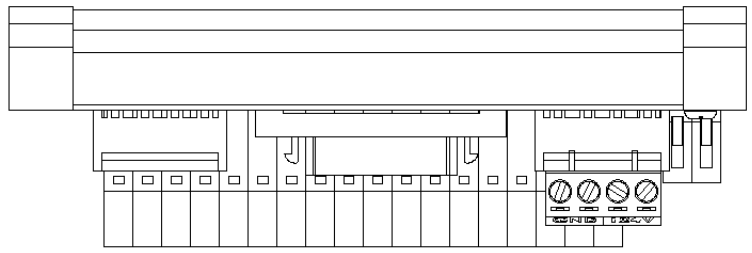

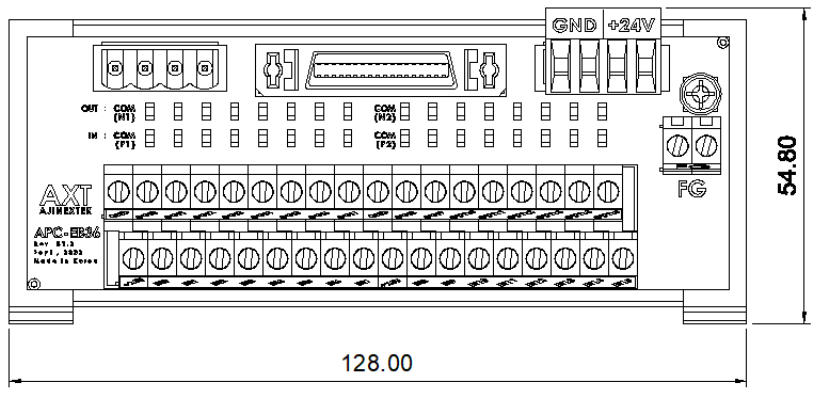

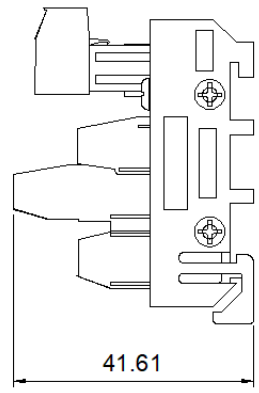

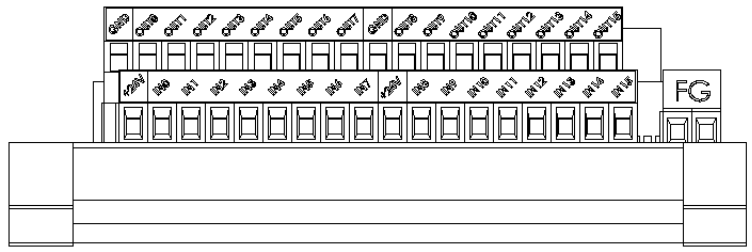

1. Pin Assigment of 4Pin Terminal Blocks (TB1, TB3, TB4)

Pin Name	Direction	Function	No.	Pin Name	Direction	Function
+24V	-	External +24Vdc power	3	GND	-	External ground
+24V	-	External +24Vdc power	4	GND	-	External ground

2. Pin Assigment of 36Pin Terminal Blocks (TB2)

Pin Name	Direction	Function	No.	Pin Name	Direction	Function
+5V	-	External +24Vdc power	19	GND	-	External ground
IN00	IN	Digital input 00bit	20	OUT00	OUT	Digital output 00bit
IN01	IN	Digital input 01bit	21	OUT01	OUT	Digital output 01bit
IN02	IN	Digital input 02bit	22	OUT02	OUT	Digital output 02bit
IN03	IN	Digital input 03bit	23	OUT03	OUT	Digital output 03bit
IN04	IN	Digital input 04bit	24	OUT04	OUT	Digital output 04bit
IN05	IN	Digital input 05bit	25	OUT05	OUT	Digital output 05bit
IN06	IN	Digital input 06bit	26	OUT06	OUT	Digital output 06bit
IN07	IN	Digital input 07bit	27	OUT07	OUT	Digital output 07bit
+5V	-	External +24Vdc power	28	GND	-	External ground
IN08	IN	Digital input 08bit	29	OUT08	OUT	Digital output 08bit
IN09	IN	Digital input 09bit	30	OUT09	OUT	Digital output 09bit
IN10	IN	Digital input 10bit	31	OUT10	OUT	Digital output 10bit
IN11	IN	Digital input 11bit	32	OUT11	OUT	Digital output 11bit
IN12	IN	Digital input 12bit	33	OUT12	OUT	Digital output 12bit
IN13	IN	Digital input 13bit	34	OUT13	OUT	Digital output 13bit
IN14	IN	Digital input 14bit	35	OUT14	OUT	Digital output 14bit
IN15	IN	Digital input 15bit	36	OUT15	OUT	Digital output 15bit

3. Pin Assigment of 2Pin Terminal Blocks (TB5)

Pin Name	Direction	Function	No.	Pin Name	Direction	Function
FG	-	Frame ground	2	FG	-	Frame ground

NO	CODE	PART NUMBER	DESCRIPTION	QUANTITY	VENDOR
-	-	-	-	-	-
TB5	0037-00225	BR-500C-2P	2P,DIP ScrewType,Pitch5.08mm	1 EA	Beeryong Electronics
TB4	0037-00001	AK850-4	4P,SIP,Female,Screw	1 EA	PHOENIX MECANO
TB3	0037-00004	USL-51MVW-4P	4P,Pitch5.08mm,Male,Straight	1 EA	Seoil Electronics
TB2	0037-00044	AK370-36P	36P,DIP ScrewType,Pitch5.0mm	1 EA	PHOENIX MECANO
TB1	0037-00004	USL-51MVW-4P	4P,Pitch5.08mm,Male,Straight	1 EA	Seoil Electronics
CN1	0034-00283	2-5175867-5	36P,DIP,Straight	1 EA	Tyco Electronics

	NAME	SIGNATURE
DRAWN	Ha hyeon cheol (15 Jan 2008)	
CHK'D	Shin man soo (15 Jan 2008)	
APPV'D	Kim tae heon (15 Jan 2008)	

DIMENSIONS: mm

WEIGHT: -

REVISION DATE: -

DWG DATE: 15 Jan 2008

AXT AJINEXTEK CO., LTD.

NAME: APC-EB36 v1.2

DIGITAL INPUT/OUTPUT 32CH TERMINAL BLOCK SCREW TYPE

DRAWING NO: AXT401-8-07-0005

SIZE: A3

SCALE 1 : 1 | SHEET 1 OF 1 | REV 1.0