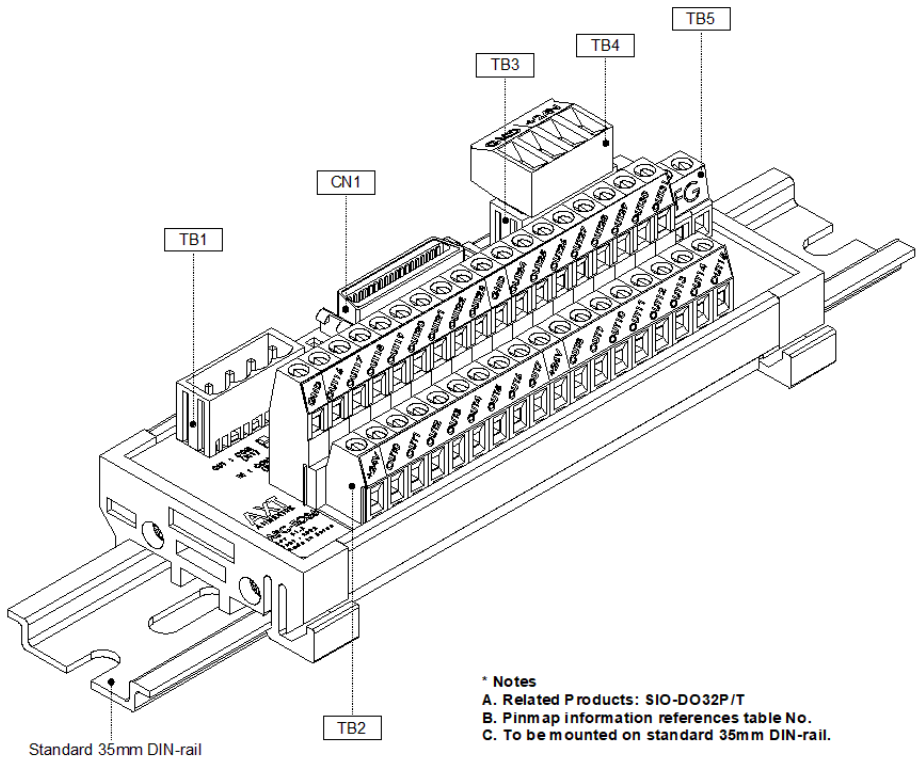


* Notes
A. Related Products: SIO-DO32P/T
B. Pinmap information references table No.
C. To be mounted on standard 35mm DIN-rail.

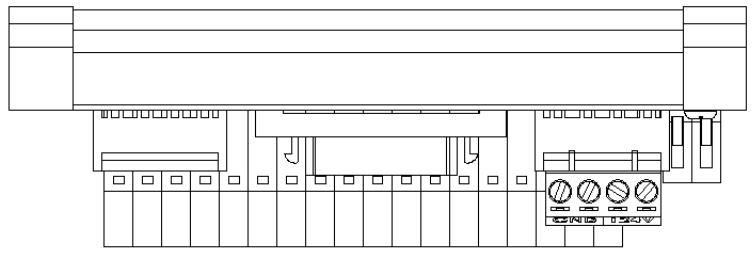

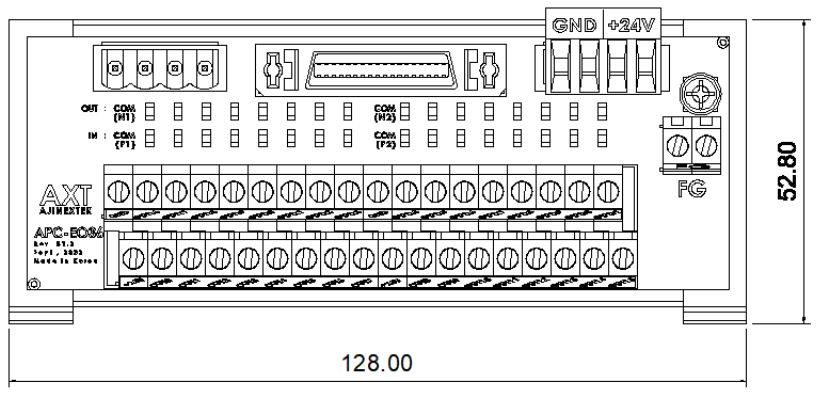


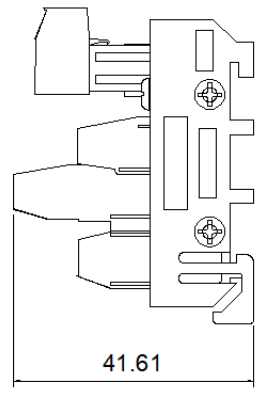


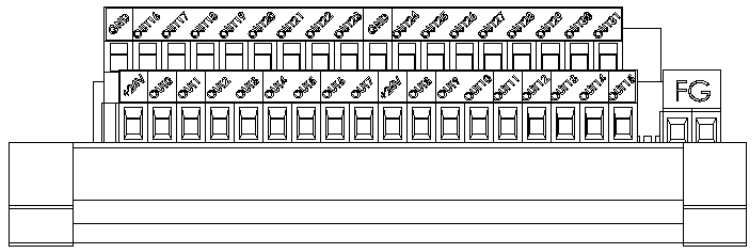


**1. Pin Assigment of 4Pin Terminal Blocks (TB1, TB3, TB4)**

| Pin Name | Direction | Function | No. | Pin Name | Direction | Function |
|---|---|---|---|---|---|---|
| +24V | - | External +24Vdc power | 3 | GND | - | External ground |
| +24V | - | External +24Vdc power | 4 | GND | - | External ground |

**2. Pin Assigment of 36Pin Terminal Blocks (TB2)**

| Pin Name | Direction | Function | No. | Pin Name | Direction | Function |
|---|---|---|---|---|---|---|
| +24V | - | External +24Vdc power | 19 | GND | - | External ground |
| OUT00 | OUT | Digital output 00bit | 20 | OUT16 | OUT | Digital output 16bit |
| OUT01 | OUT | Digital output 01bit | 21 | OUT17 | OUT | Digital output 17bit |
| OUT02 | OUT | Digital output 02bit | 22 | OUT18 | OUT | Digital output 18bit |
| OUT03 | OUT | Digital output 03bit | 23 | OUT19 | OUT | Digital output 19bit |
| OUT04 | OUT | Digital output 04bit | 24 | OUT20 | OUT | Digital output 20bit |
| OUT05 | OUT | Digital output 05bit | 25 | OUT21 | OUT | Digital output 21bit |
| OUT06 | OUT | Digital output 06bit | 26 | OUT22 | OUT | Digital output 22bit |
| OUT07 | OUT | Digital output 07bit | 27 | OUT23 | OUT | Digital output 23bit |
| +24V | - | External +24Vdc power | 28 | GND | - | External ground |
| OUT08 | OUT | Digital output 08bit | 29 | OUT24 | OUT | Digital output 24bit |
| OUT09 | OUT | Digital output 09bit | 30 | OUT25 | OUT | Digital output 25bit |
| OUT10 | OUT | Digital output 10bit | 31 | OUT26 | OUT | Digital output 26bit |
| OUT11 | OUT | Digital output 11bit | 32 | OUT27 | OUT | Digital output 27bit |
| OUT12 | OUT | Digital output 12bit | 33 | OUT28 | OUT | Digital output 28bit |
| OUT13 | OUT | Digital output 13bit | 34 | OUT29 | OUT | Digital output 29bit |
| OUT14 | OUT | Digital output 14bit | 35 | OUT30 | OUT | Digital output 30bit |
| OUT15 | OUT | Digital output 15bit | 36 | OUT31 | OUT | Digital output 31bit |

**3. Pin Assigment of 2Pin Terminal Blocks (TB5)**

| Pin Name | Direction | Function | No. | Pin Name | Direction | Function |
|---|---|---|---|---|---|---|
| FG | - | Frame ground | 2 | FG | - | Frame ground |

| NO | CODE | PART NUMBER | DESCRIPTION | QUANTITY | VENDOR |
|---|---|---|---|---|---|
| - | - | - | - | - | - |
| TB5 | 0037-00225 | BR-500C-2P | 2P,DIP ScrewType,Pitch5.08mm | 1 EA | Beeryong Electronics |
| TB4 | 0037-00001 | AK850-4 | 4P,SIP,Female,Screw | 1 EA | PHOENIX MECANO |
| TB3 | 0037-00004 | USL-51MVW-4P | 4P,Pitch5.08mm,Male,Straight | 1 EA | Seoil Electronics |
| TB2 | 0037-00044 | AK370-36P | 36P,DIP ScrewType,Pitch5.0mm | 1 EA | PHOENIX MECANO |
| TB1 | 0037-00004 | USL-51MVW-4P | 4P,Pitch5.08mm,Male,Straight | 1 EA | Seoil Electronics |
| CN1 | 0034-00283 | 2-5175867-5 | 36P,DIP,Straight | 1 EA | Tyco Electronics |

| | NAME | SIGNATURE |
|---|---|---|
| DRAWN | Ha hyeon cheol (15 Jan 2008) | |
| CHK'D | Shin man soo (15 Jan 2008) | |
| APPV'D | Kim tae heon (15 Jan 2008) | |

DIMENSIONS: mm

WEIGHT: -

| REVISION DATE | DWG DATE |
|---|---|
| - | 15 Jan 2008 |

AXT AJINEXTEK CO., LTD.

NAME: APC-EO36 v1.2

DIGITAL OUTPUT 32CH TERMINAL BLOCK SCREW TYPE

DRAWING NO: AXT401-8-07-0004

SIZE: A3

SCALE 1 : 1 | SHEET 1 OF 1 | REV 1.0