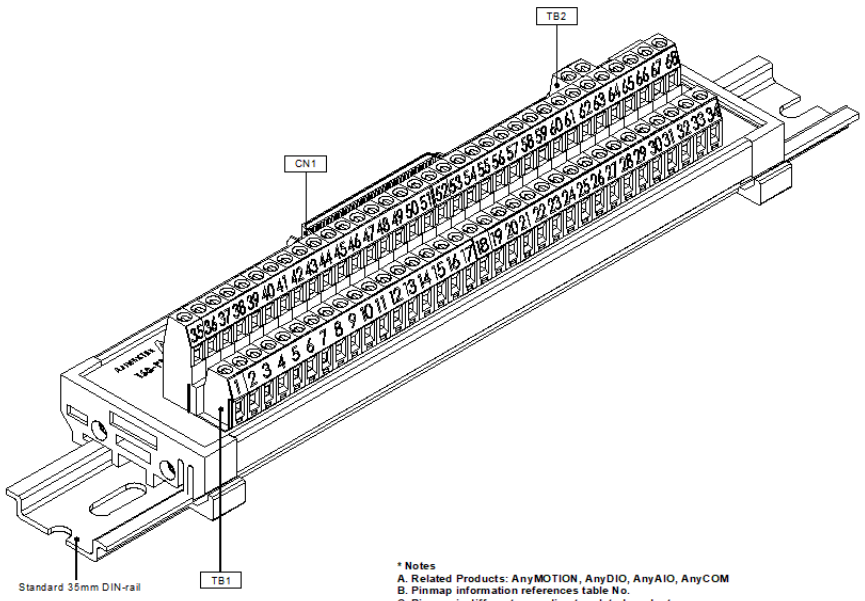

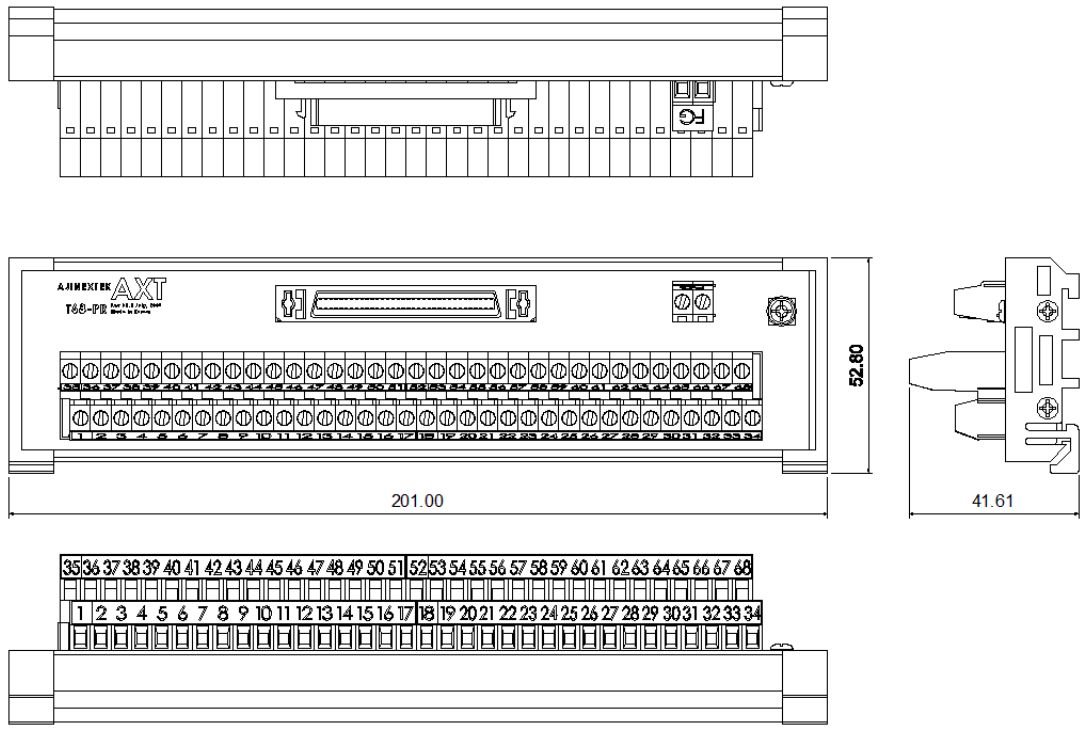

* Notes
A. Related Products: AnyMOTION, AnyDIO, AnyAIO, AnyCOM
B. Pinmap information references table No.
C. Pinmap is different according to related products.
D. To be mounted on standard 35mm DIN-rail.

n Assigment of 68Pin Terminal Blocks(TB1)						
me	Direction	Function	No.	Pin Name	Direction	Function
	-	Not define	35	N.D	-	Not define
	-	Not define	36	N.D	-	Not define
	-	Not define	37	N.D	-	Not define
	-	Not define	38	N.D	-	Not define
	-	Not define	39	N.D	-	Not define
	-	Not define	40	N.D	-	Not define
	-	Not define	41	N.D	-	Not define
	-	Not define	42	N.D	-	Not define
	-	Not define	43	N.D	-	Not define
	-	Not define	44	N.D	-	Not define
	-	Not define	45	N.D	-	Not define
	-	Not define	46	N.D	-	Not define
	-	Not define	47	N.D	-	Not define
	-	Not define	48	N.D	-	Not define
	-	Not define	49	N.D	-	Not define
	-	Not define	50	N.D	-	Not define
	-	Not define	51	N.D	-	Not define
	-	Not define	52	N.D	-	Not define
	-	Not define	53	N.D	-	Not define
	-	Not define	54	N.D	-	Not define
	-	Not define	55	N.D	-	Not define
	-	Not define	56	N.D	-	Not define
	-	Not define	57	N.D	-	Not define
	-	Not define	58	N.D	-	Not define
	-	Not define	59	N.D	-	Not define
	-	Not define	60	N.D	-	Not define
	-	Not define	61	N.D	-	Not define
	-	Not define	62	N.D	-	Not define
	-	Not define	63	N.D	-	Not define
	-	Not define	64	N.D	-	Not define
	-	Not define	65	N.D	-	Not define
	-	Not define	66	N.D	-	Not define
	-	Not define	67	N.D	-	Not define
	-	Not define	68	N.D	-	Not define
n Assigment of 2Pin Terminal Blocks(TB2)						
me	Direction	Function	No.	Pin Name	Direction	Function
	-	Frame ground	2	FG	-	Frame ground

NO	CODE	PART NUMBER	DESCRIPTION	QUANTITY	VENDOR
-	-	-	-	-	-
-	-	-	-	-	-
-	-	-	-	-	-
-	-	-	-	-	-
TB2	0037-60026	BR-60BC-2P	2P,DIP Screw Type,Pitch5.08mm	1 EA	Beaucoup Electronics
TB1	0037-60046	AK270-68P	68P,DIP Screw Type,Pitch5.08mm	1 EA	PHOENIX MECANO
CN1	0034-60254	2-5176867-5	68P,DIP,Straight	1 EA	Tyco Electronics

	NAME	SIGNATURE
DRAWN	Ha hyeon cheol	
CHK'D	Shin man soo	
APPV'D	Kim tae heon	

DIMENSIONS: mm
WEIGHT: -

REVISION DATE: -
DWG DATE: 15 Jan 2008

AJINEXTEK CO., LTD.

NAME: T68-PR v1.0
UNIVERSAL 68PIN TERMINAL BLOCK
SCREW TYPE

DRAWING NO: AXT401-8-07-0002
SIZE: A2
SCALE: 1 : 1 | SHEET 1 OF 1 | REV 1.0